Air Liquide
ENGINEERING & CONSTRUCTION

Cryogenics & Lurgi technologies

Air Liquide
Global E&C Solutions

Acetic Acid from
Coal Gasification

THIS DOCUMENT IS PUBLIC

October 14, 2017
Air Liquide Engineering & Construction

Air Liquide Group

2016 Key figures

(Following the acquisition of Airgas on May 23rd, 2016)

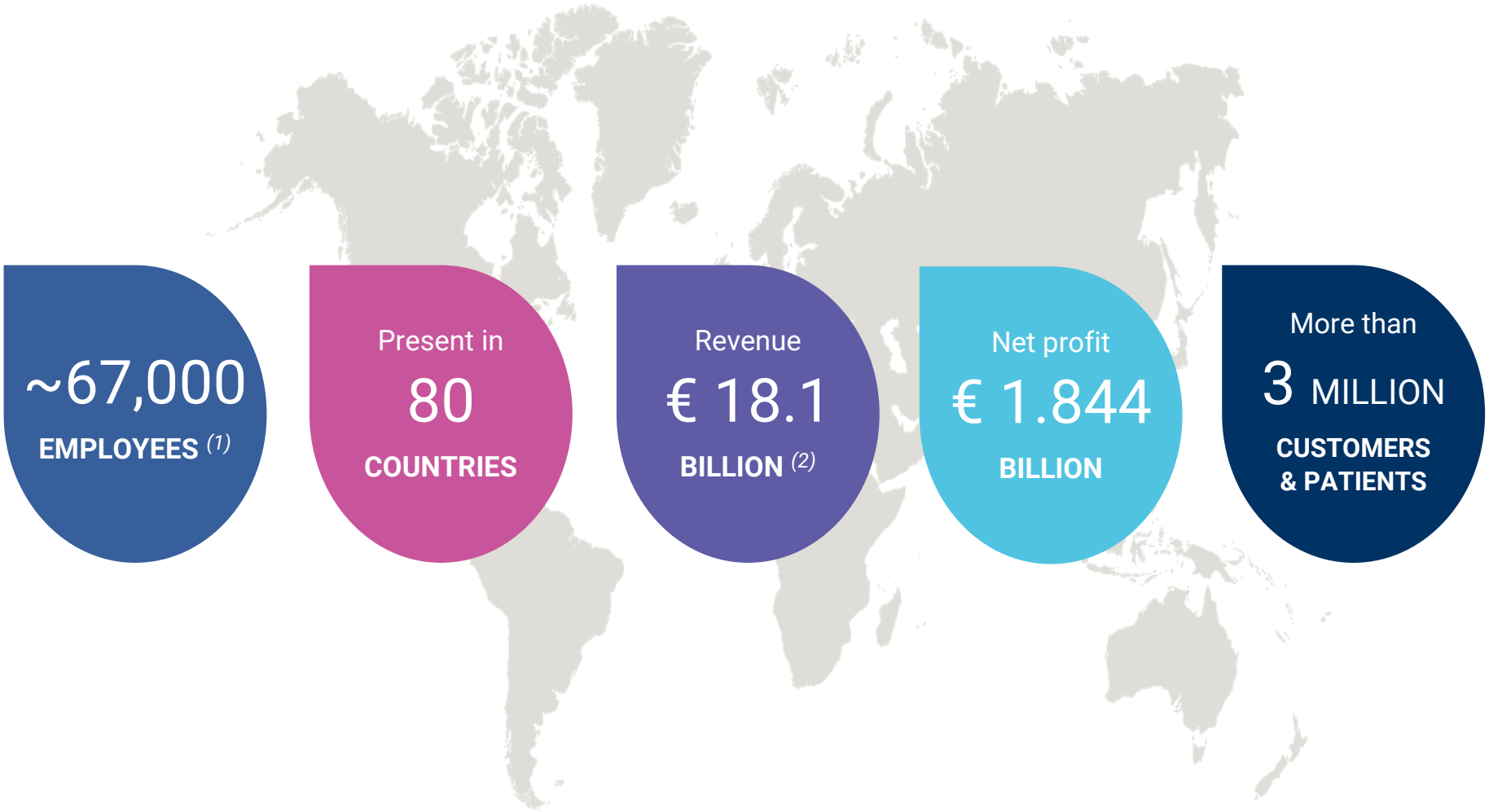

(1) As of December 31st, 2016.
(2) Excluding Welding and Diving, restated as discontinued operations.

Air Liquide Engineering & Construction

Air Liquide Global E&C Solutions

1,600
Patents

60
Proprietary technologies

15
Engineering centers and front end offices

3
Manufacturing centers

A technology-driven organization

Product lines managing our technology portfolio

Standard Plants

Cryogenics

Downstream & Petrochemicals

Hydrogen

Hydrocarbons

Oleochemicals

Customer Services

Our locations worldwide

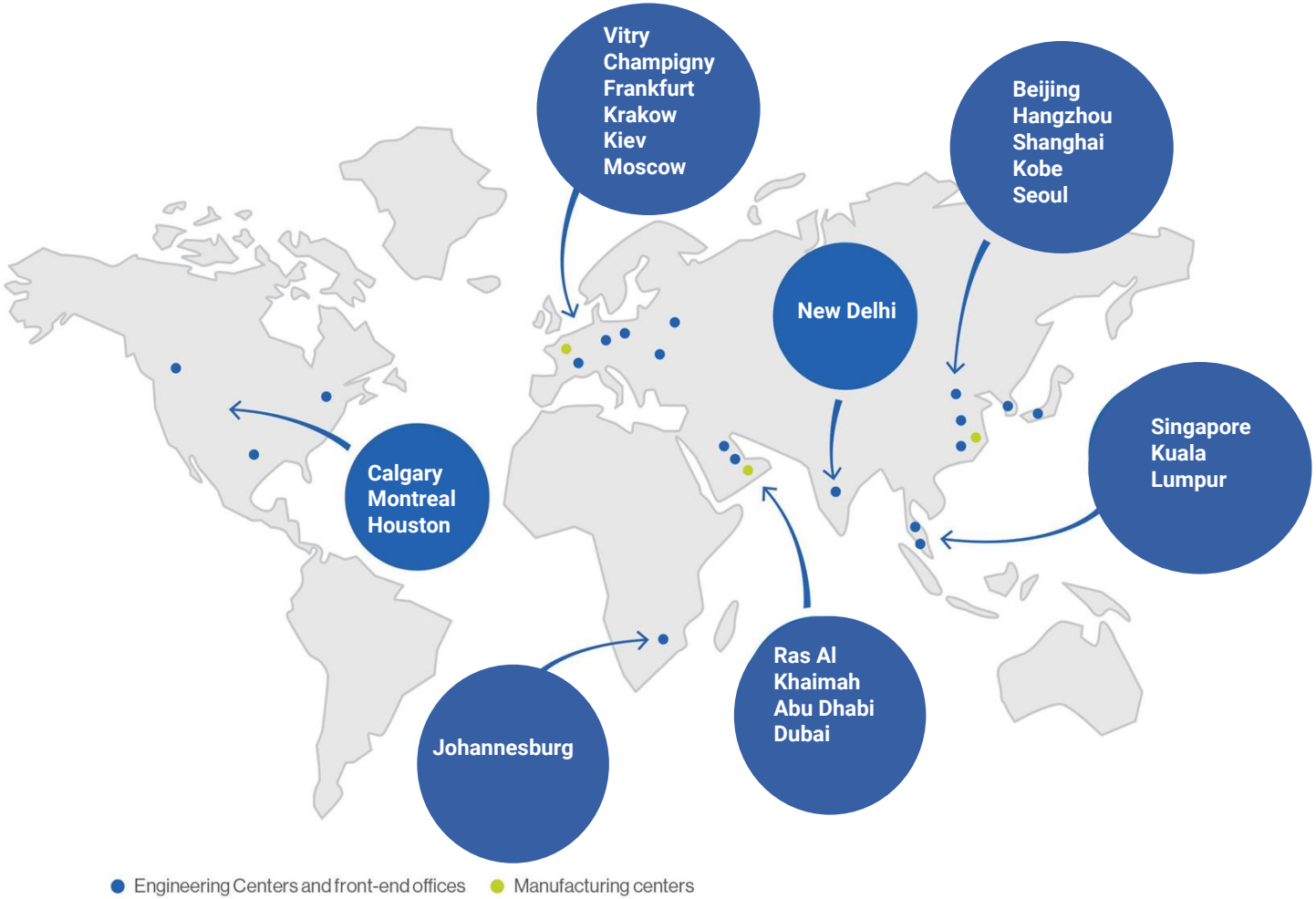

Acetic Acid from Coal Gasification

Production of Acetic Acid

Direct Oxidation of Saturated Hydrocarbons

$$2C_4H_{10} + 5O_2 \rightarrow 4CH_3COOH + 2H_2O$$

Acetaldehyde Oxidation

$$2CH_3CHO + O_2 \rightarrow 2CH_3COOH$$

Ethylene Oxidation

$$C_2H_4 + O_2 \rightarrow CH_3COOH$$

Carbonylation of Methanol

$$CH_3OH + CO \rightarrow CH_3COOH$$

Catalysts

cobalt iodide catalyst (1941)

iodide-promoted rhodium catalyst (1968)

iridium based catalyst (1996)

Process development in methanol carbonylation is still continuing…..

Source : Ullmann's Encyclopedia of Chemical Technology

Production of Acetic Acid

The methanol carbonylation route accounts for more than 90% of the world's virgin acetic acid capacity

Production of Acetic Acid through Coal Gasification

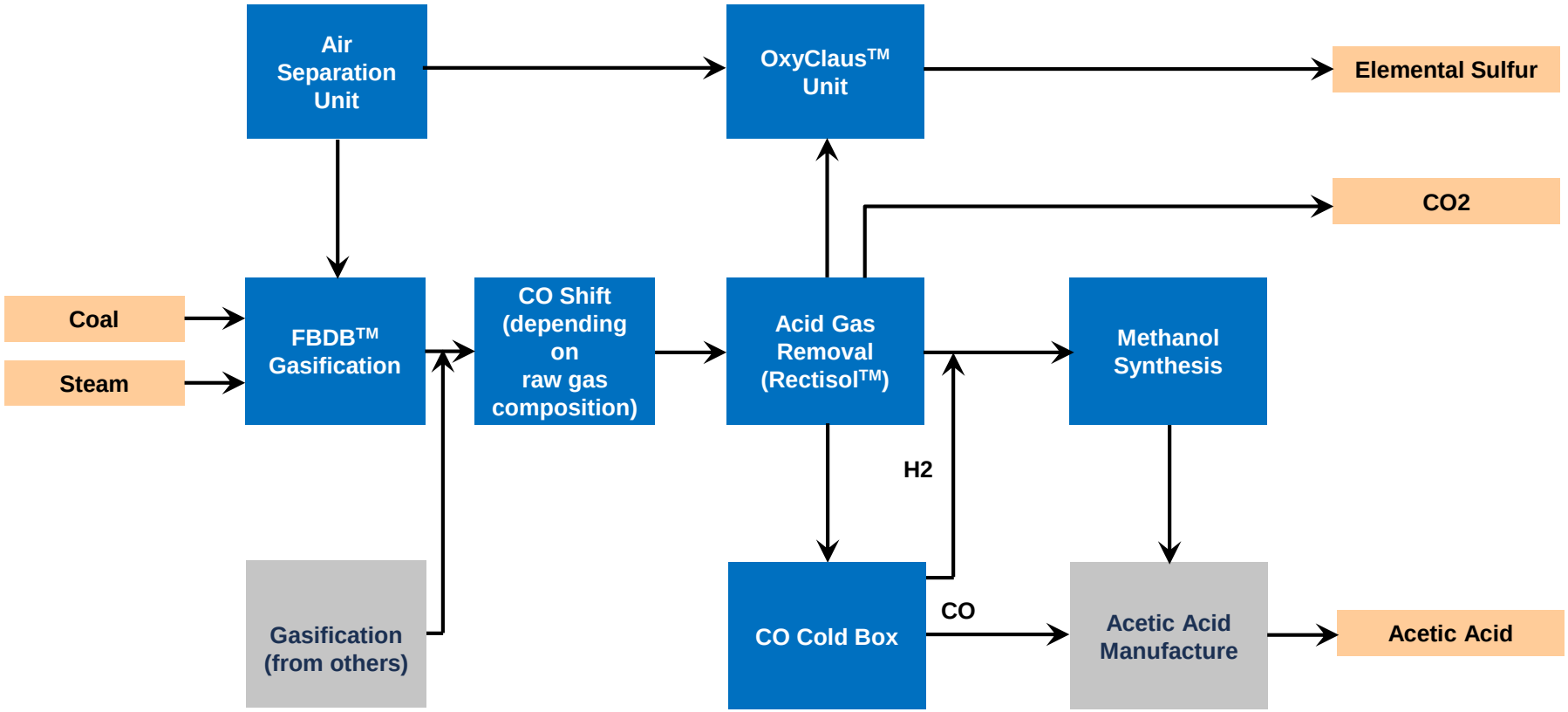

Coal Gasification – Chemical Reactions

Oxidation:

$C + ½ O_2 \rightarrow CO$ $\Delta H = -111$ kJ/mol

$CO + ½ O_2 \rightarrow CO_2$ $\Delta H = -283$ kJ/mol

$H2 + ½ O_2 \rightarrow H_2O$ $\Delta H = -242$ kJ/mol

Reduction:

$C + CO_2 \rightarrow 2\ CO$ $\Delta H = 172$ kJ/mol

$C + H_2O \rightarrow CO + H_2$ $\Delta H = 131$ kJ/mol

Methane formation:

$C + 2H_2 \rightarrow CH_4$ $\Delta H = -75$ kJ/mol

Water-gas shift:

$CO + H_2O \rightarrow CO_2 + H_2$ $\Delta H = -41$ kJ/mol

Lurgi FBDB™ Coal Gasification

- The process was initially developed in the 1930s
- The process, has a long track record of optimum performance featuring high gasification efficiency and low oxygen consumption over many years of operation
- Proven in the world for all ranks of coal
- Proven in the world for various applications :

Syngas for Fuels Sasol, Secunda 1979	Syngas for SNG DGC, Canada 1985	Syngas for NH_3 Tianji, China 1987
Syngas for MeOH Yima, China 2000	Syngas for DRI JSPL, Angul 2014	

- The gasifiers at Sasol, Secunda form the largest Coal Gasification Plant in the World

CO-Shift

CO-Shift Process Highlights

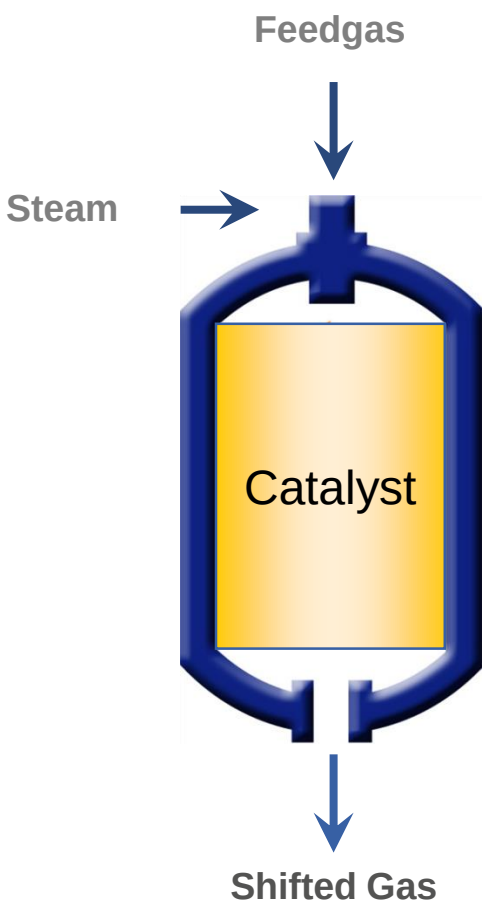

Equilibrium Reaction:

$CO + H_2O \Leftrightarrow CO_2 + H_2 + Heat$

Temperature:	**240–500 °C**
Pressure:	**20 - 80 bar**

Catalyst:

Raw Gas Shift:	**Co- Mo-Ox**
Clean Shift:	**Fe- Cr- Cu**

CO-Shift Process Highlights

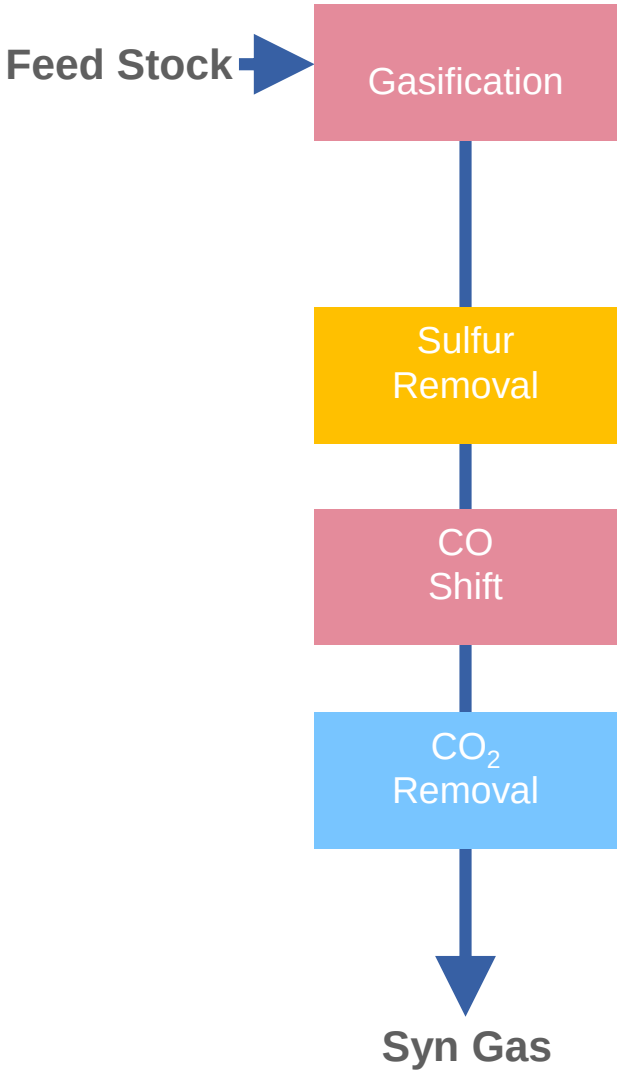

Clean Gas Shift

- Sulphur is a poison to the catalyst, hence applied only if the gas is free of sulphur
- The gas is purified in an upstream desulphuriser and gets cooled, thereby loosing moisture
- It is saturated with steam in a Cooler-Saturator System to provide the requisite moisture
- Higher Capital Costs

CO-Shift Process Highlights

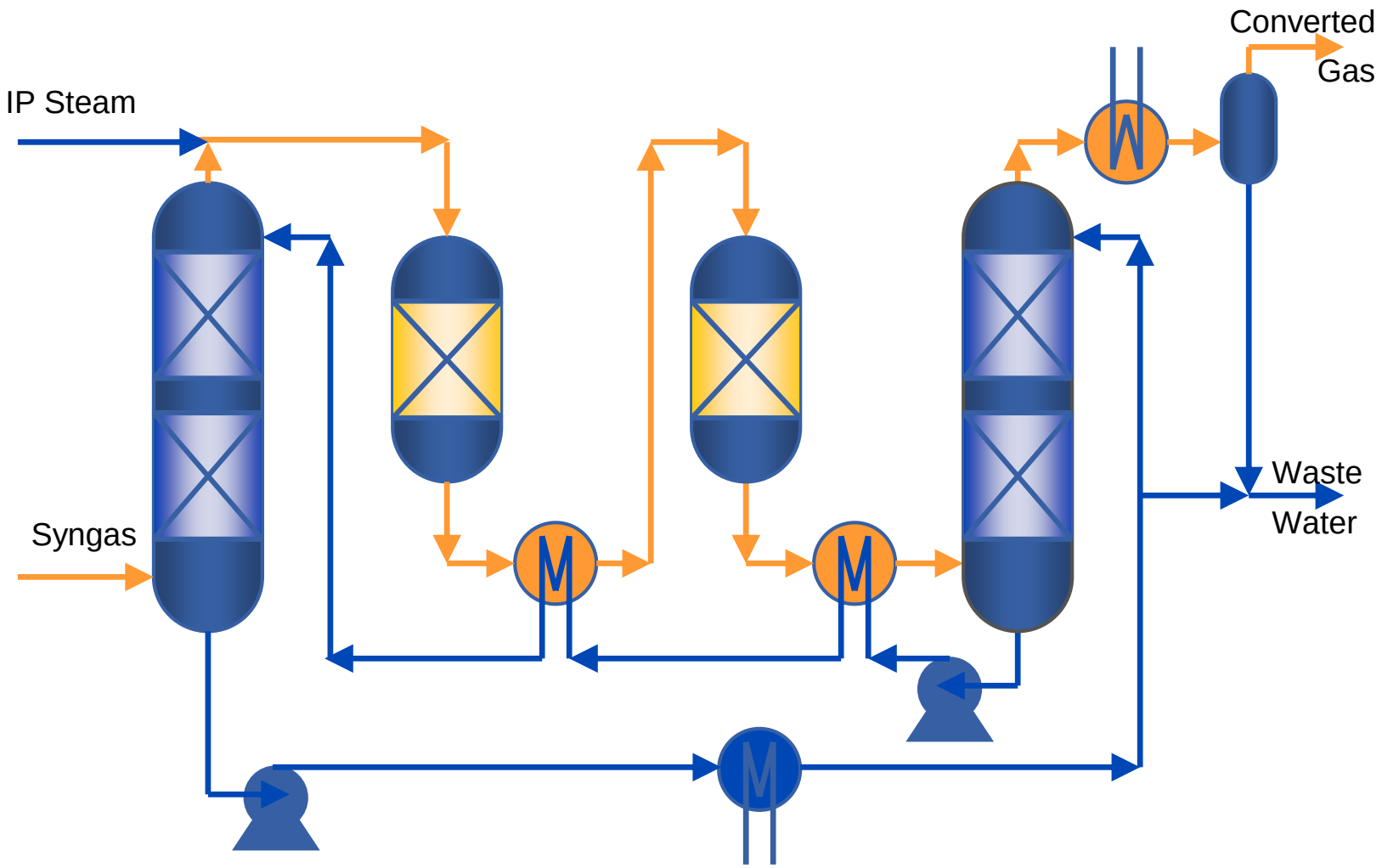

CO-Shift Process Highlights

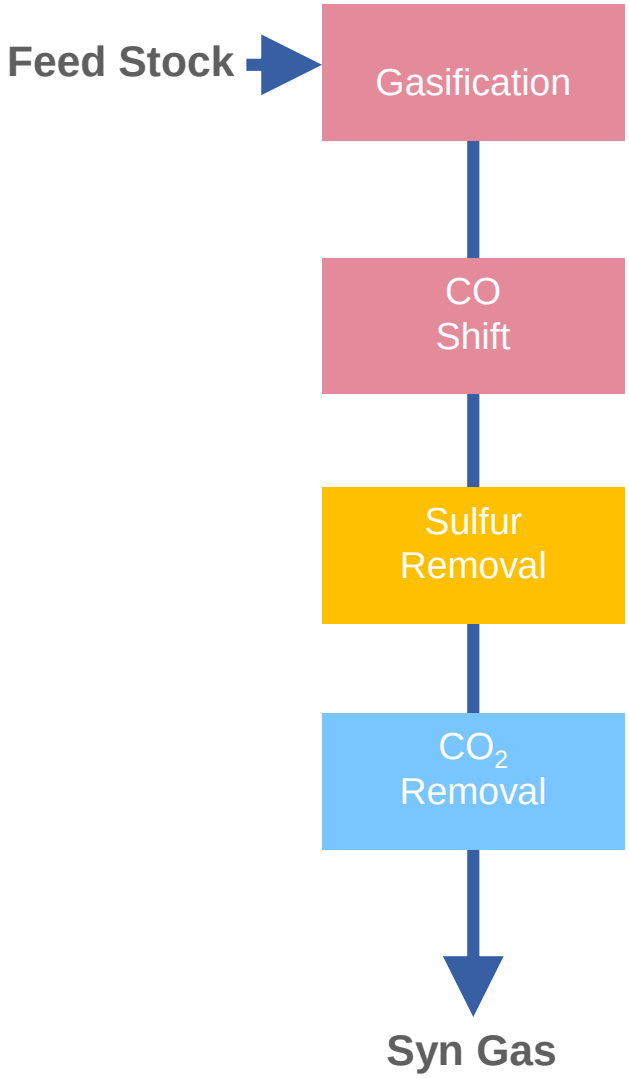

Raw Gas Shift

- *Minimum* Sulphur Content in sour gas required , hence applicable for gases containing sulphur
- Suitable for gases that contain sufficient amount of moisture
- Steam Generation and low grade Heat Supply
- Process Condensate recycled

CO-Shift Process Highlights

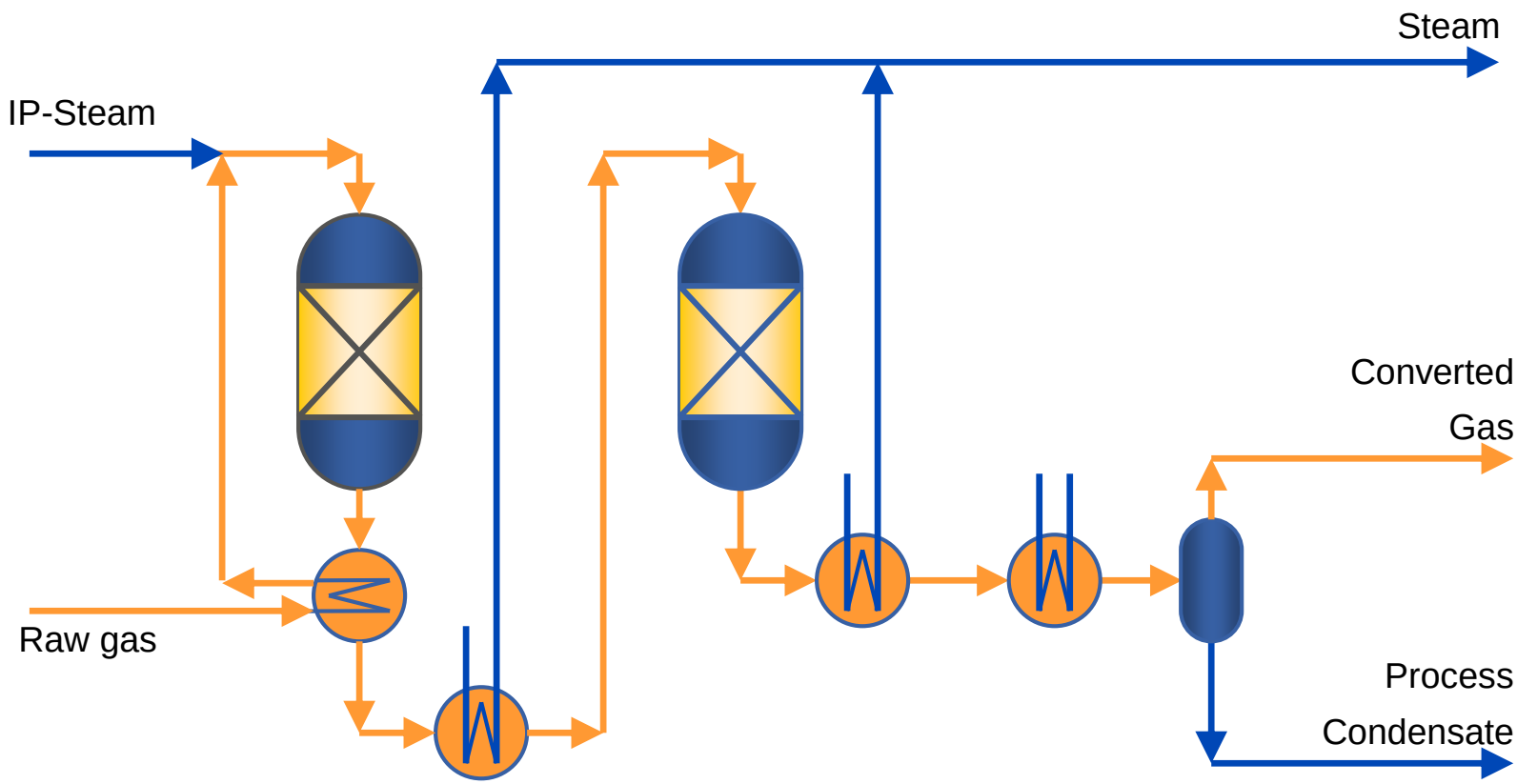

Rectisol Unit

Rectisol™ Flow Scheme

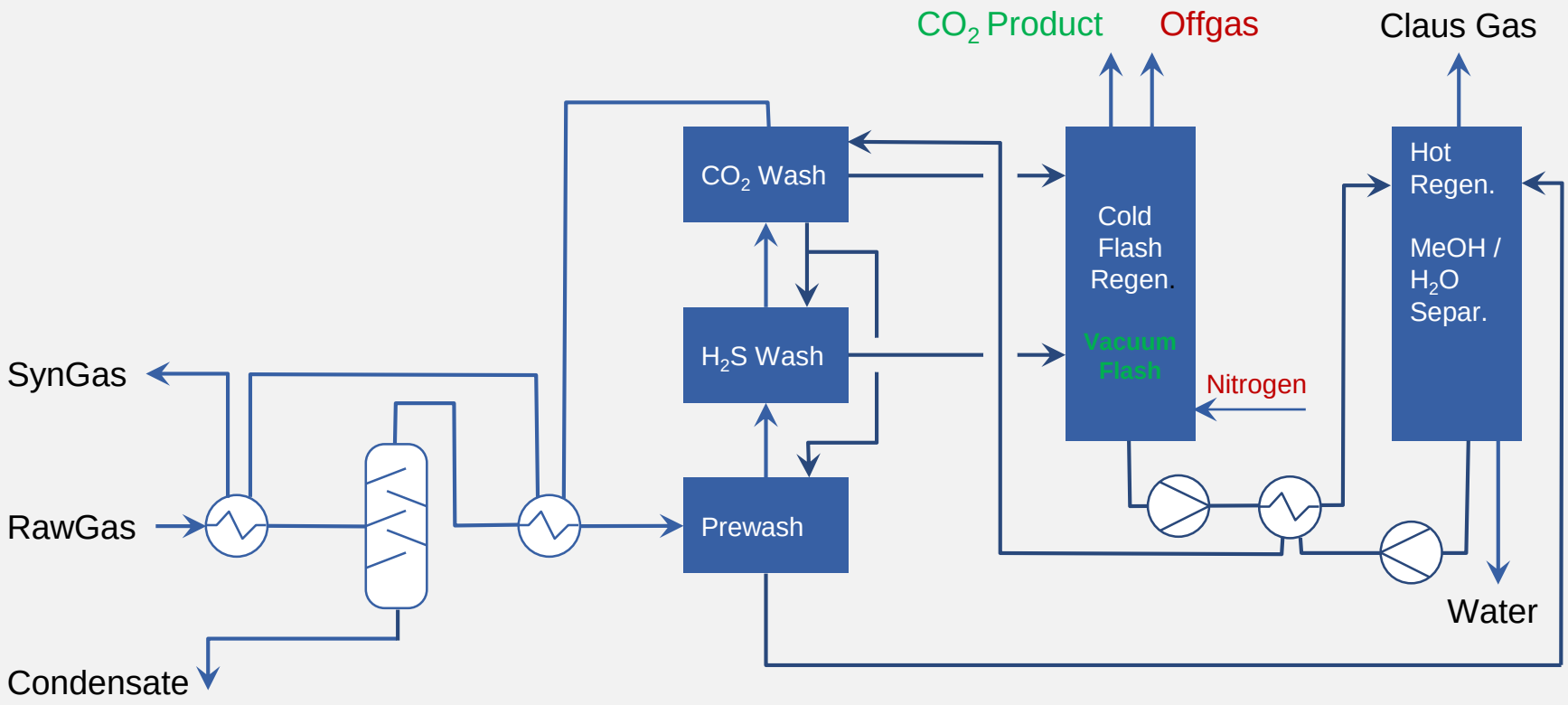

Rectisol™ Process Highlights

- The Rectisol™ syngas purification technology has an outstanding position in the world
  - Especially in the case of coal gasification
  - Also feed gas generated from oil or petcoke gasification
- The Rectisol™ process was invented over 65 years ago and still today purifies 75% of the syngas produced worldwide.
- Rectisol™ is still the only process that deals with all raw gas contaminants.
- More than 100 Lurgi Rectisol® plants were built within the last 65 years.
- The Rectisol® gas purification technology is a purely physical absorption process.

Rectisol™ Process Highlights

- Trace contaminant removal COS, CS_2, NH_3, HCN, mercaptans, mercury, Fe and Ni carbonyls and BTX
- As the COS is removed together with the H2S, there is no need for a COS hydrolysis reactor upstream of a Rectisol unit
- Desulfurization — to synthesis feed quality total S < 0.1 ppmv
- Bulk CO_2 removal — bulk CO_2 can be removed (10ppm in syngas)
- CO_2 purification — CO_2 can be purified total S < 5 ppmv
- Acid Gas Enrichment — Claus-suited acid gas

Rectisol™ Process Highlights

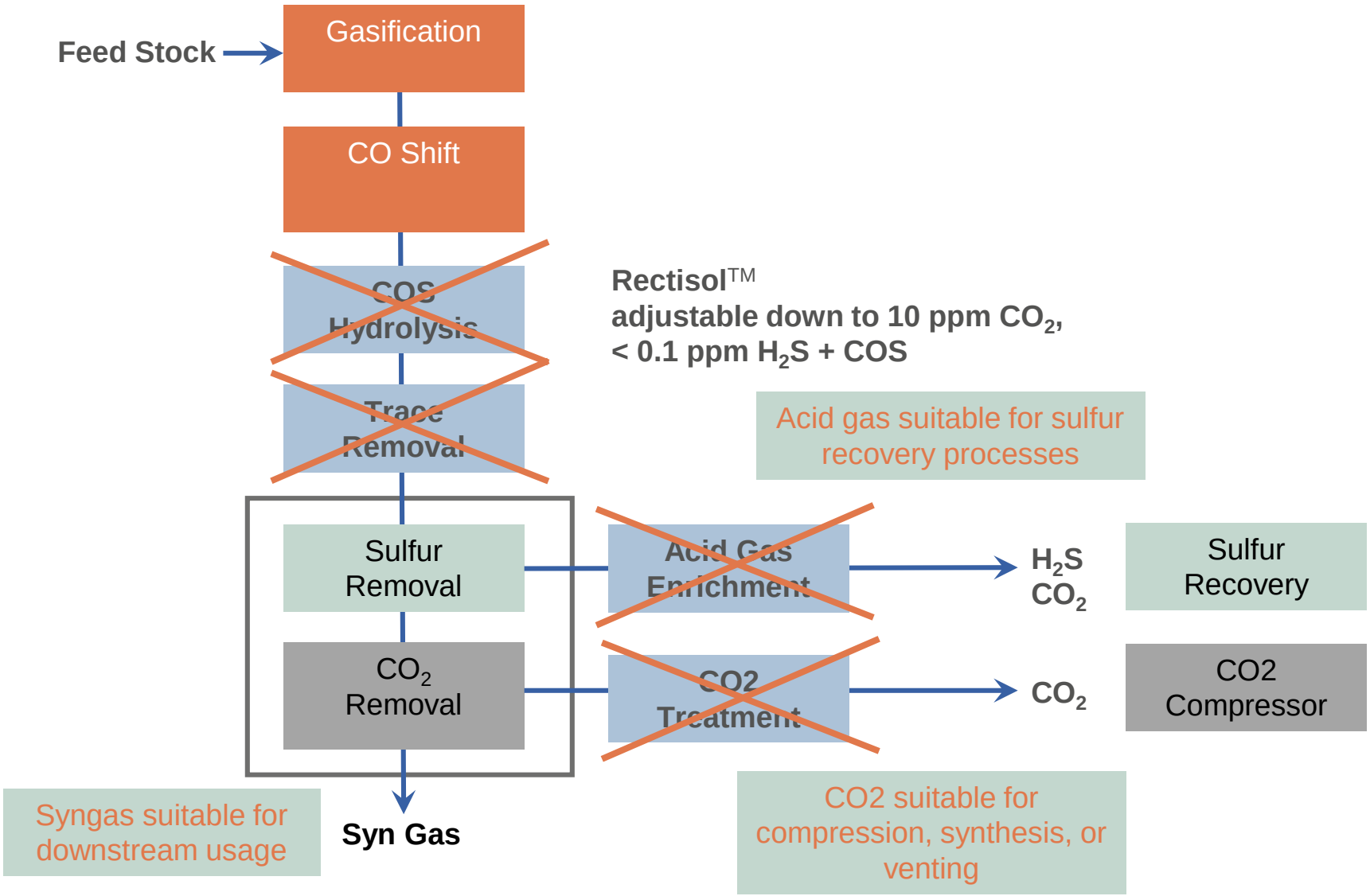

CO Cold Box

CO Cold Box Process Highlights

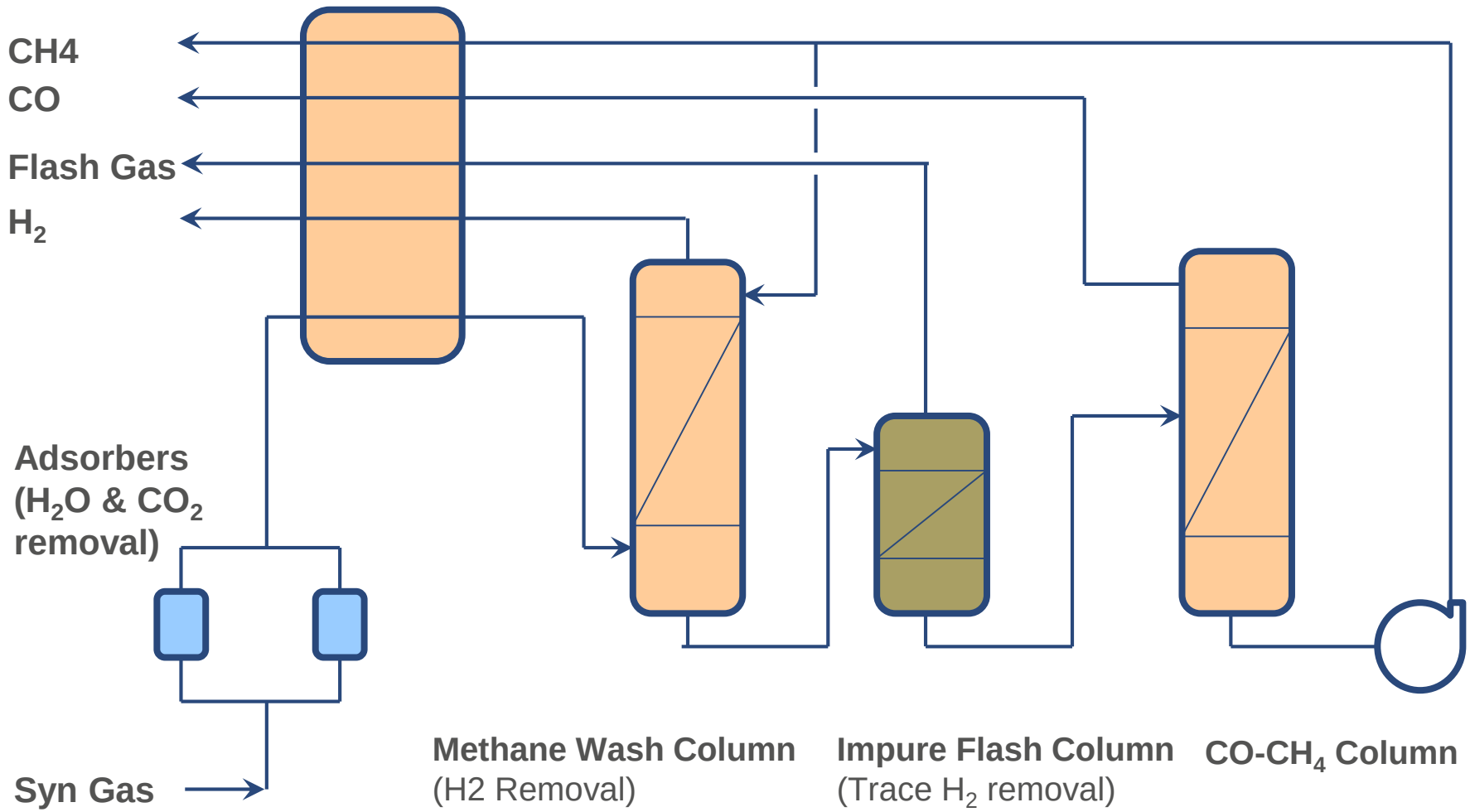

CO Cold Box Process Highlights

- Around 75 plants built out of which around 25 are operated by AL.
- The activated alumina bed, located upstream, very effectively protects the bed of the molecular sieve. There is no case in the plants of the AIR LIQUIDE Group where it had to be replaced.
- AIR LIQUIDE patented AST Advanced Sieve Trays has wide operating range, very low pressure drops on columns and consequently energy savings
- Easier process control
- The Fin Plate Heat Exchangers, made in Aluminium, are a critical component for the performance, reliability and safety of the Plant.
- Flanged connections, which are potential leakage points, are avoided.
- Because of the high level of automation proposed, the efficiency of the plant is improved.

Sulphur Recovery Unit

Sulphur Recovery Unit

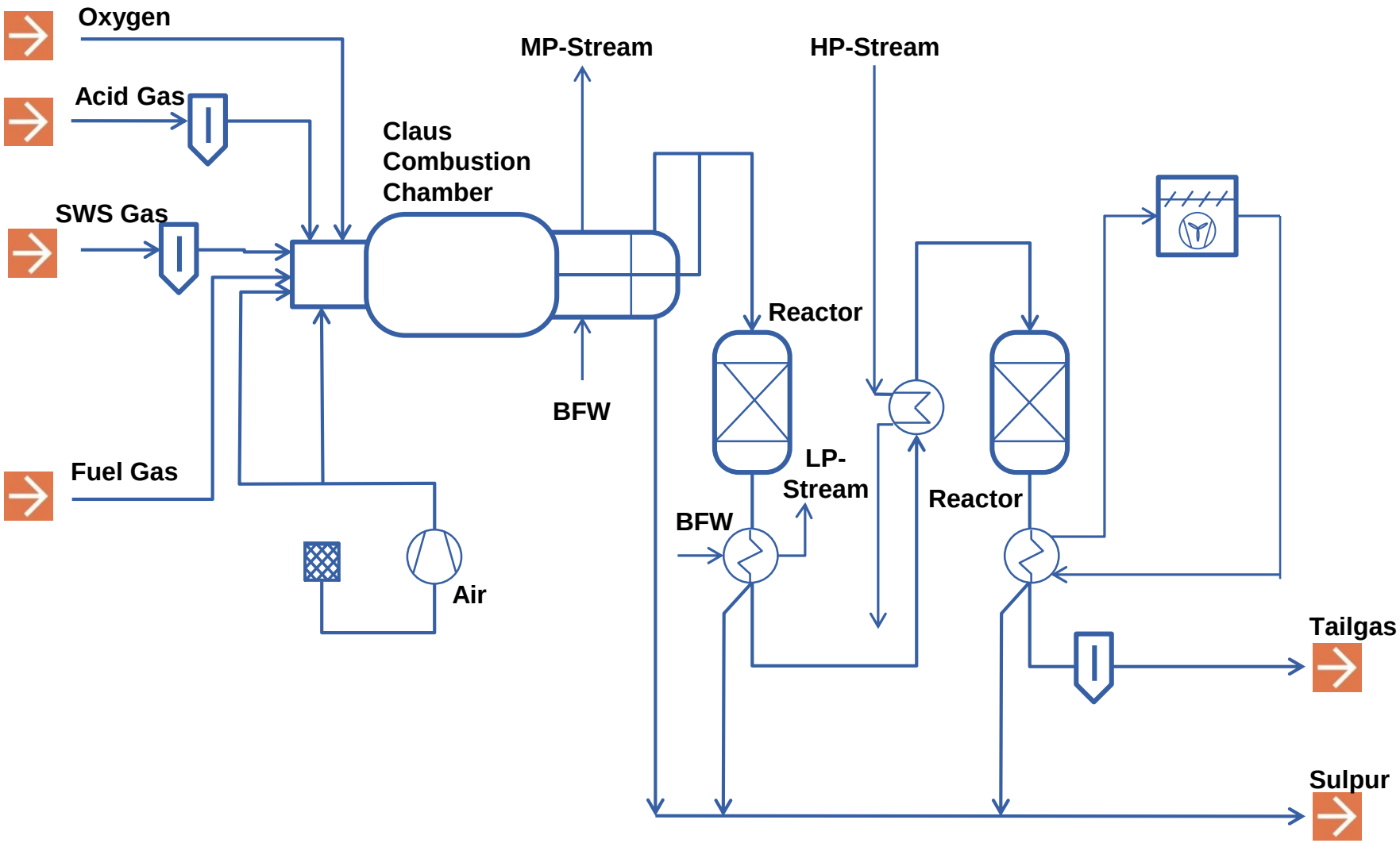

Sulphur Recovery Unit

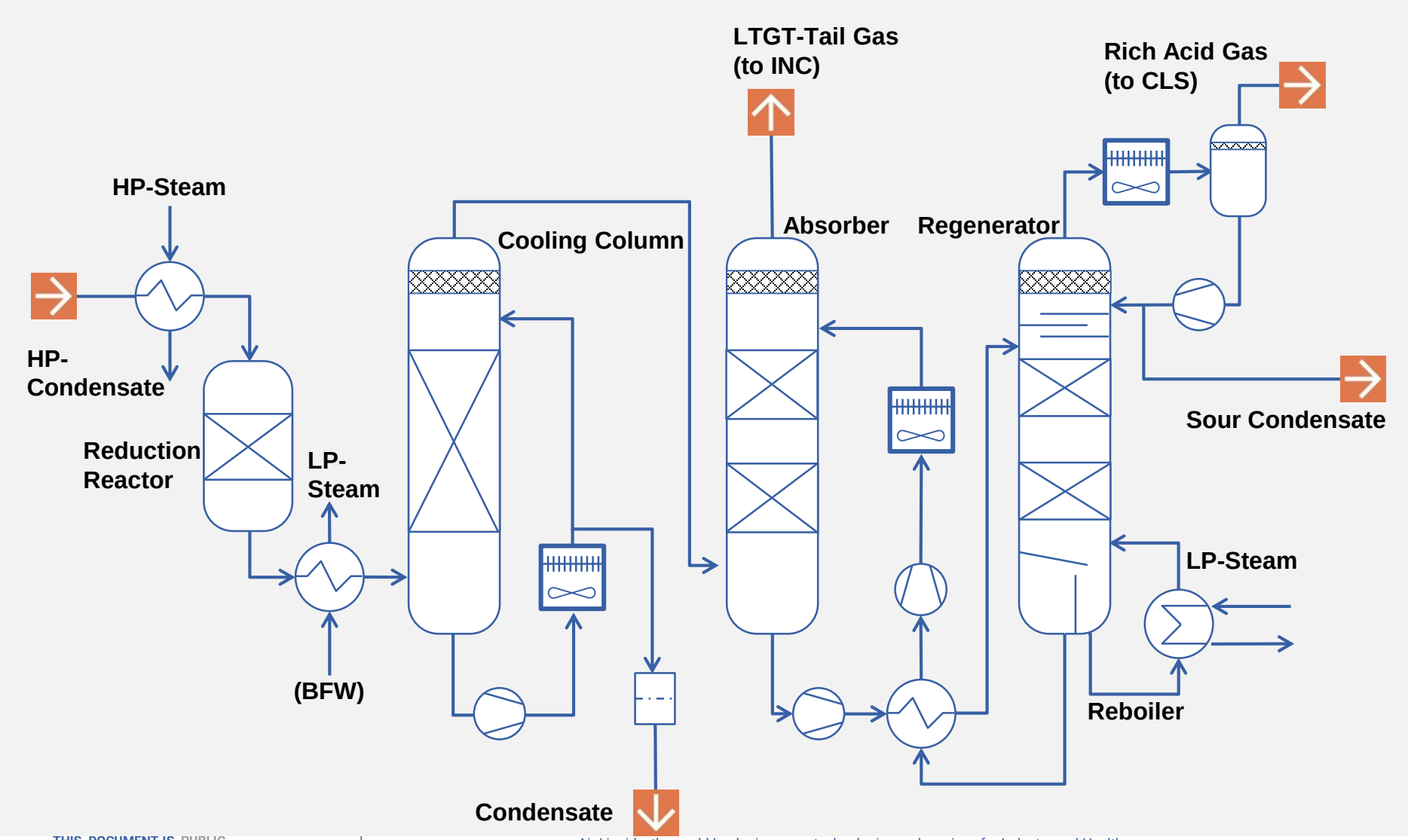

Sulphur Recovery Unit – Tail Gas Recycle

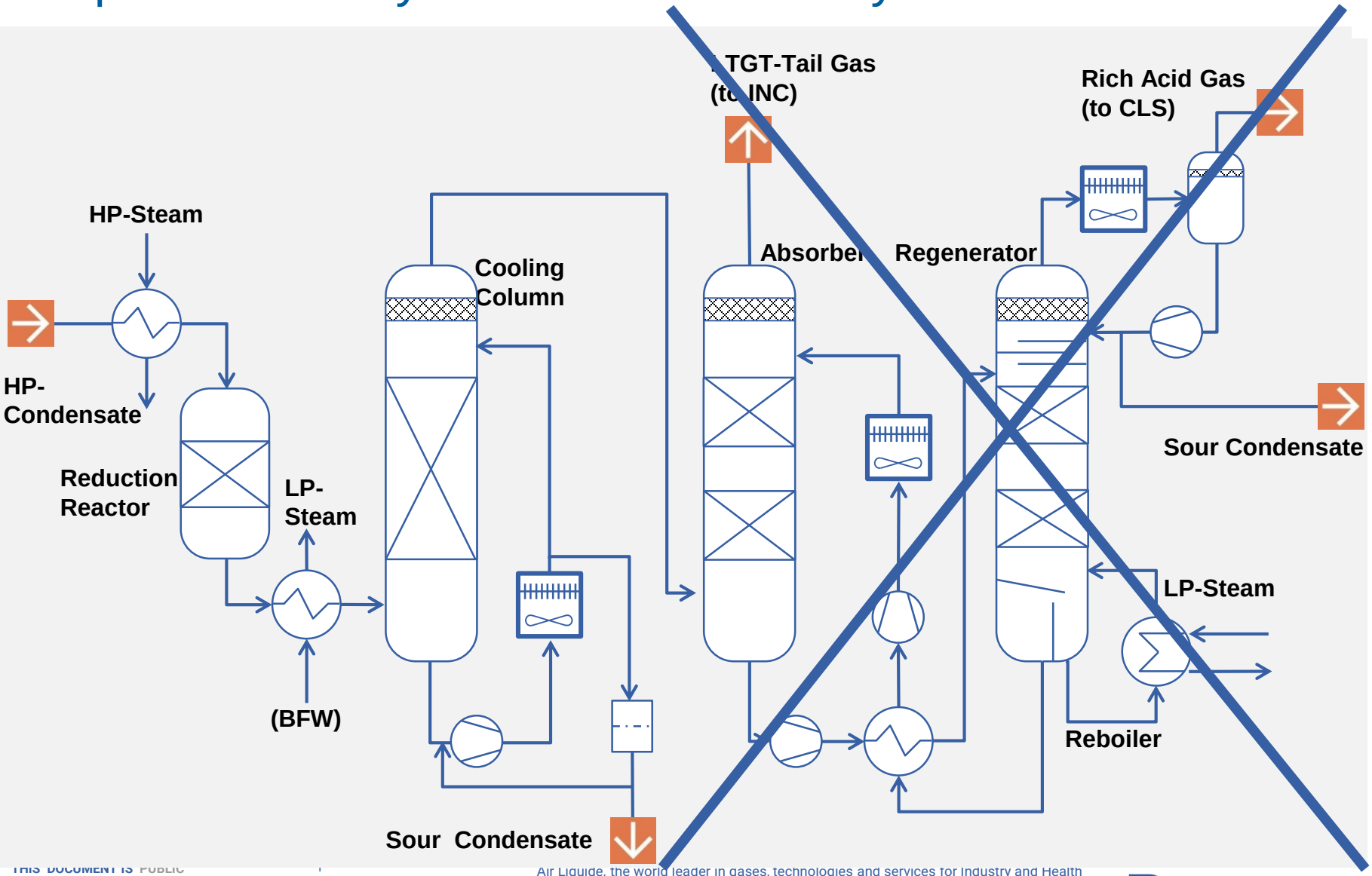

Sulphur Recovery Unit – Tail Gas Recycle

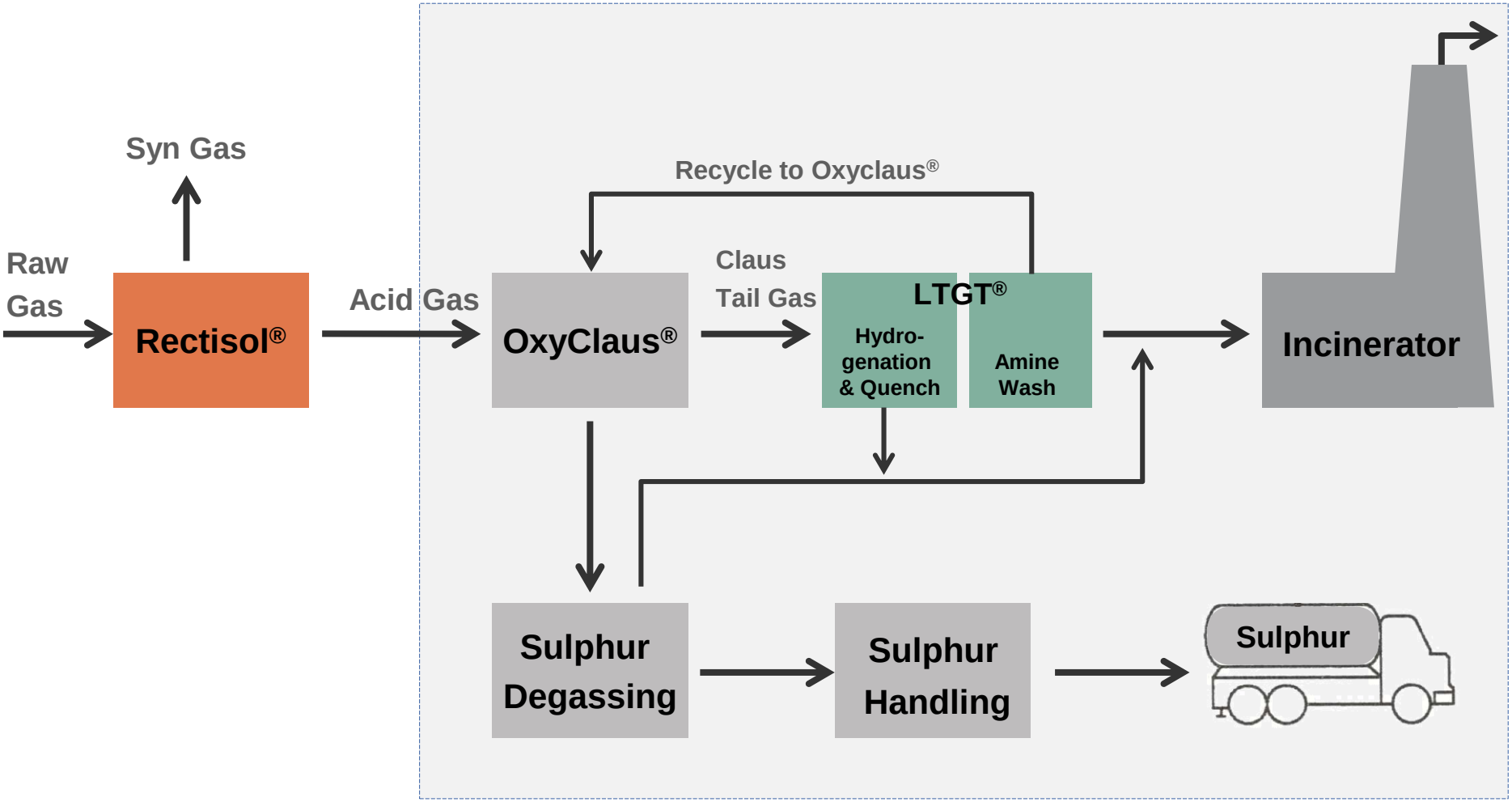

Sulphur Recovery Unit – Tail Gas Recycle

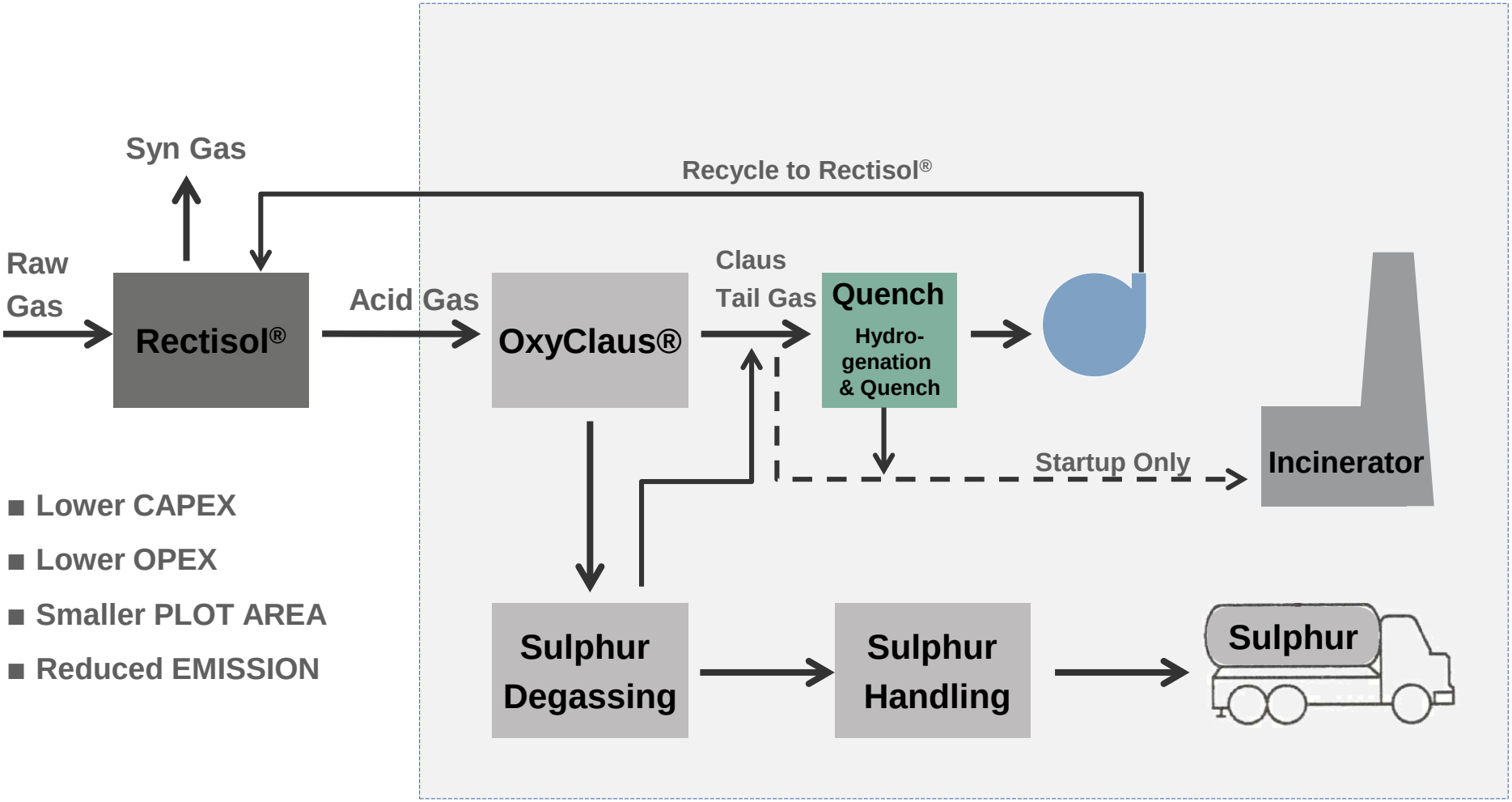

- Lower CAPEX
- Lower OPEX
- Smaller PLOT AREA
- Reduced EMISSION

Sulphur Recovery Unit in a Gasification Complex

Feed

25% H_2S
70% CO_2
1% CH_4
4% H_2O

AIR

2 Stage CLAUS
Air
309 kmol/h Air
29 kmol/h CH_4

Capacity: **100 t/d**

Cost: 

100%

O2

2 Stage CLAUS
Air + Oxygen
66 kmol/h Air
51 kmol/h O_2
17 kmol/h CH_4

100 t/d

80%

O2

2 Stage CLAUS
Air + Oxygen
96 kmol/h Air
74 kmol/h O_2
22 kmol/h CH_4

145 t/d

100%

Air Separation Unit

ASU – how it looks like

What does a standard air separation unit look like ?

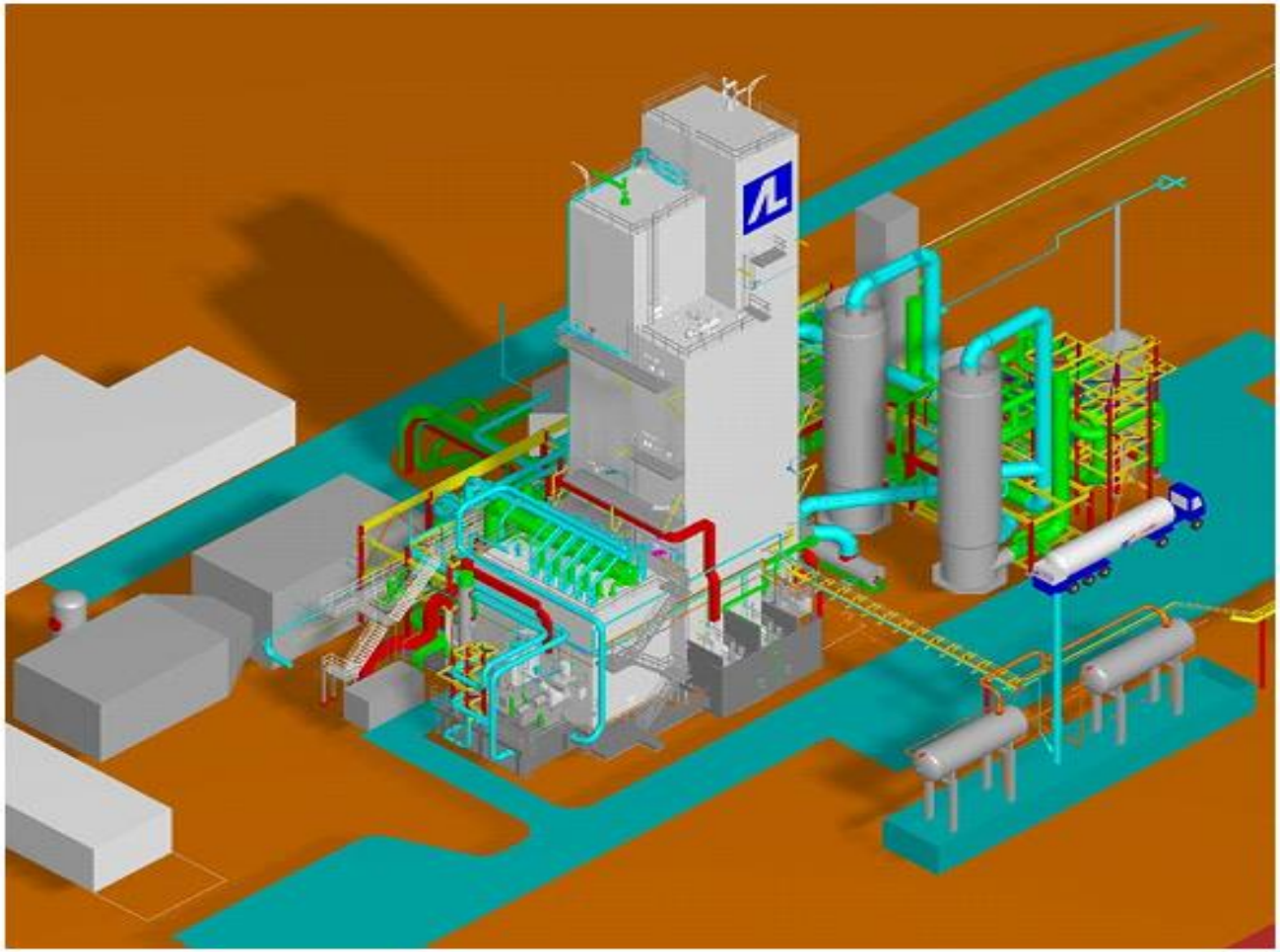

THIS

Schematic Diagram - Cryogenic Separation

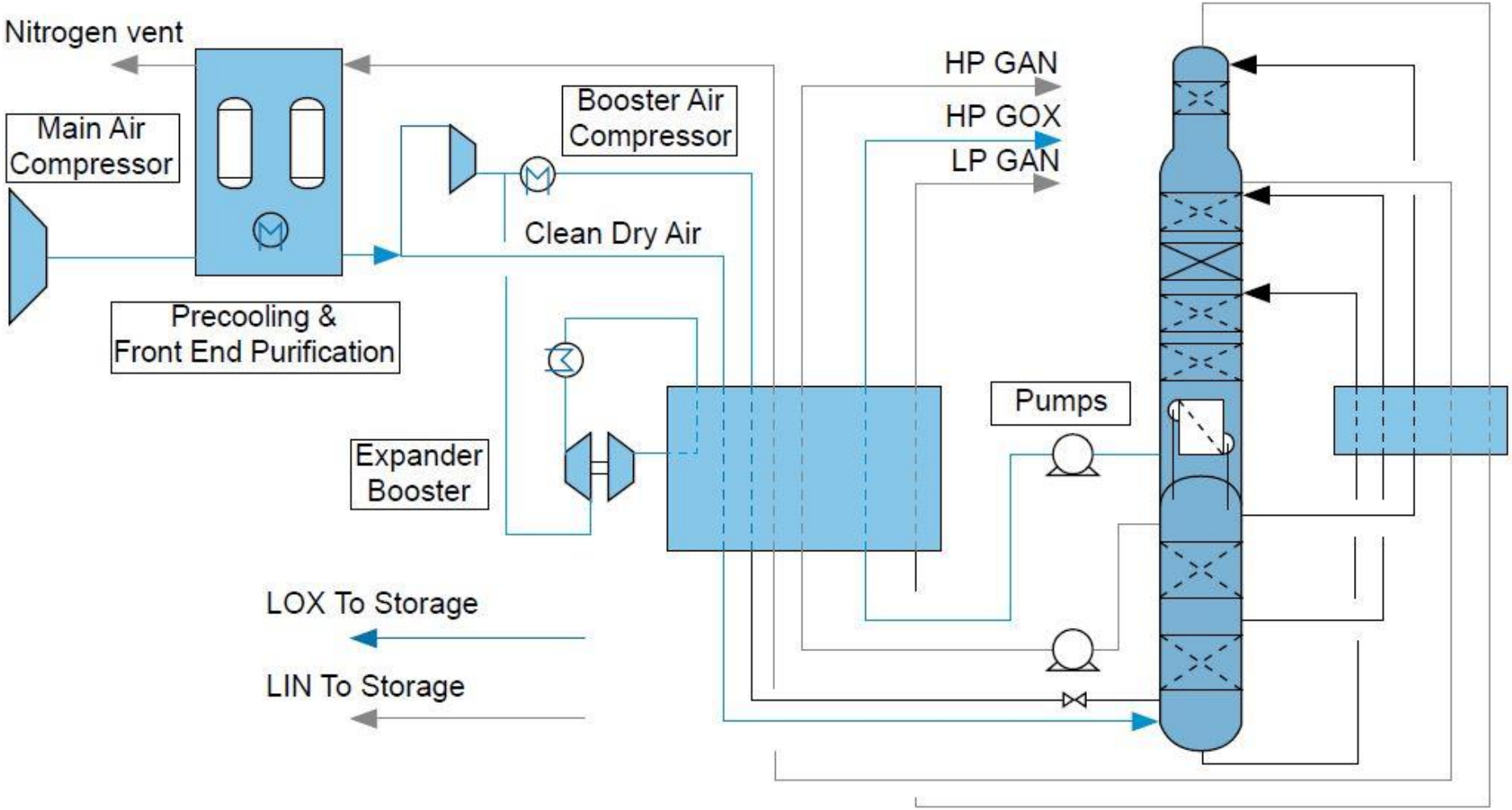

Cryogenic Separation

- Long and thorough experience in air separation plants
- Over 4000 plants built not only for 3rd party Buyers but also for direct operation by AL
- 550 production and distribution centers all over the world
- The engineering and construction activity has thus available a large amount of data on industrial operation that it can benefit from
- Being both a supplier and an operator of plants, Air Liquide selects the most suitable solution for a project taking into account :
  - The type and characteristics of product utilization
  - The compression system
  - The automation needs
  - The availability of utilities
  - The plant layout

Wrap-up

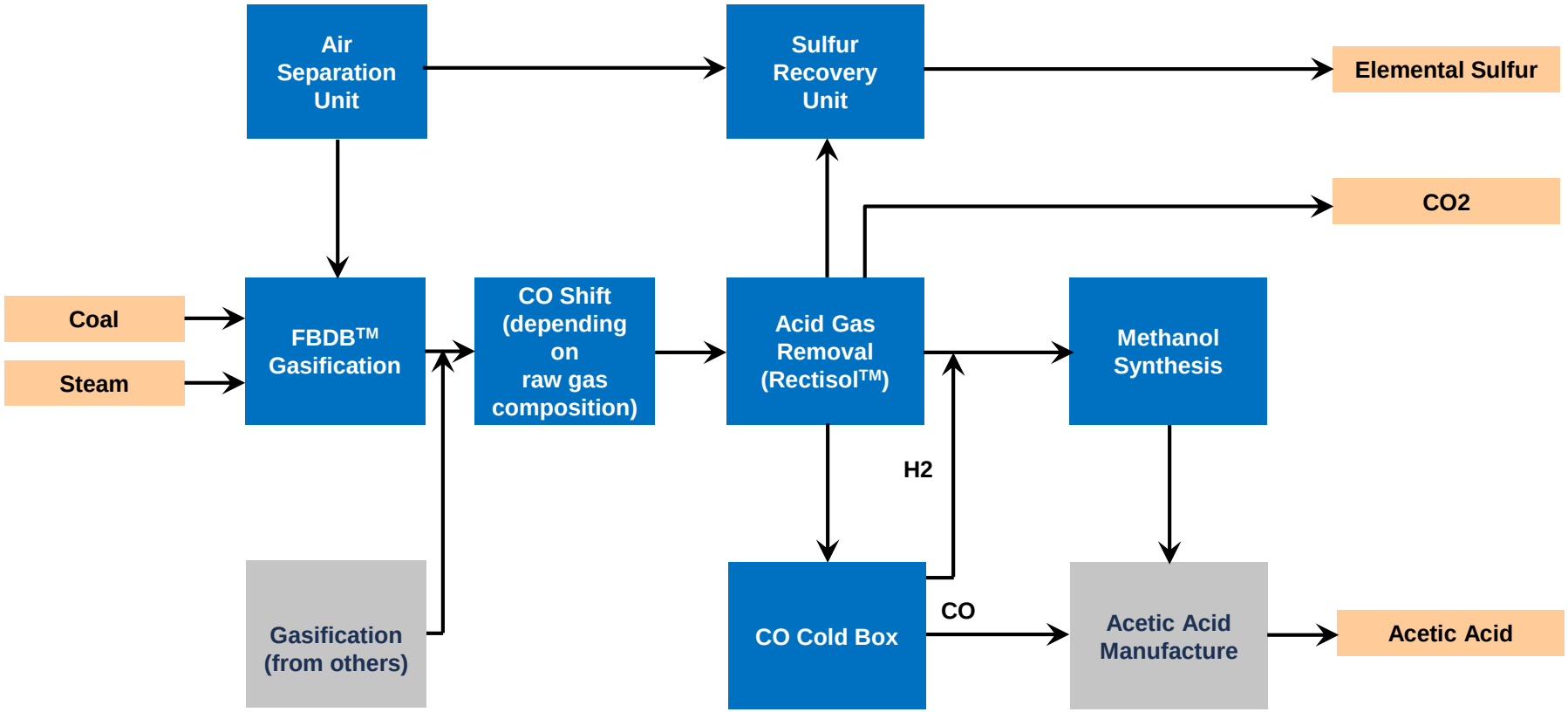
Air Separation Unit
Sulfur Recovery Unit
Elemental Sulfur
CO2
Coal
Steam
FBDB™ Gasification
CO Shift (depending on raw gas composition)
Acid Gas Removal (Rectisol™)
Methanol Synthesis
H2
Gasification (from others)
CO Cold Box
CO
Acetic Acid Manufacture
Acetic Acid

Wrap-up

- Acetic Acid is a key raw material used for the production of a wide range of products we use in our daily lives
- Coal Gasification is an attractive route for acetic acid production via the methanol carbonylation route
- Lurgi FBDB Gasification – 120 gasifiers in operation, proven for all ranks of coal and for various applications
- Acid Gas Cleaning viz. the Rectisol Process is the leading process for cleaning syngas from Coal, Petcoke or Residue Gasification. More than 100 Rectisol Units built in the last 65 years
- More than 170- Claus Units and more than 40 Oxygen enriched Sulphur Recovery Units. Emission Free SRU also offered
- Air Separation Units – More than 4000 references. The world's largest ASU 5800 TPD (at sea level) under construction in South Africa
- All technologies integrated in one single package – a **Complete One-Stop-Shop**

Thank you

www.engineering-airliquide.com